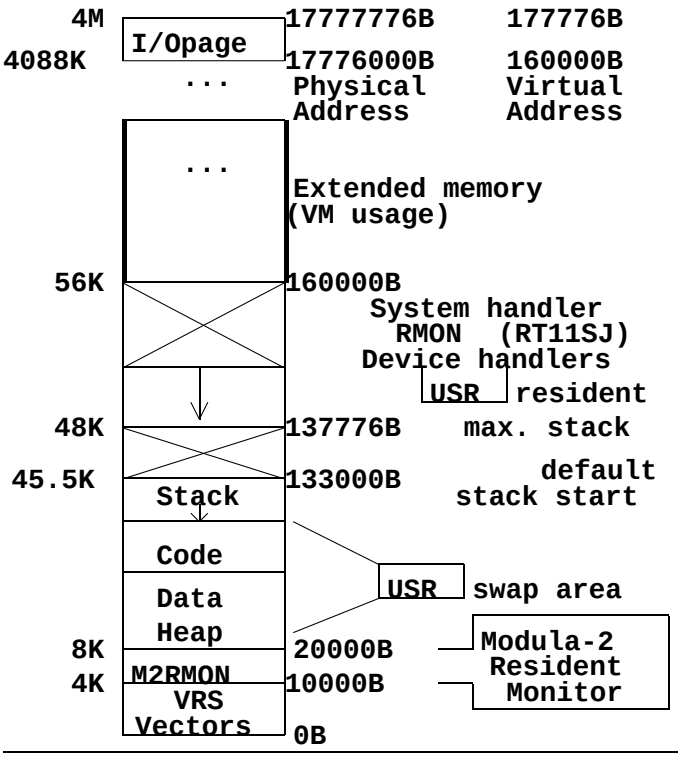
4M
4088K
I/Opage
...
17777776B
177776B
17776000B
160000B
Physical Address
Virtual Address
...
Extended memory (VM usage)
56K
160000B
System handler
RMON (RT11SJ)
Device handlers
USR
resident
48K
137776B
max. stack
45.5K
133000B
default stack start
Stack
Code
Data
Heap
USR
swap area
8K
20000B
Modula-2 Resident Monitor
4K
M2RMON
10000B
VRS Vectors
0B

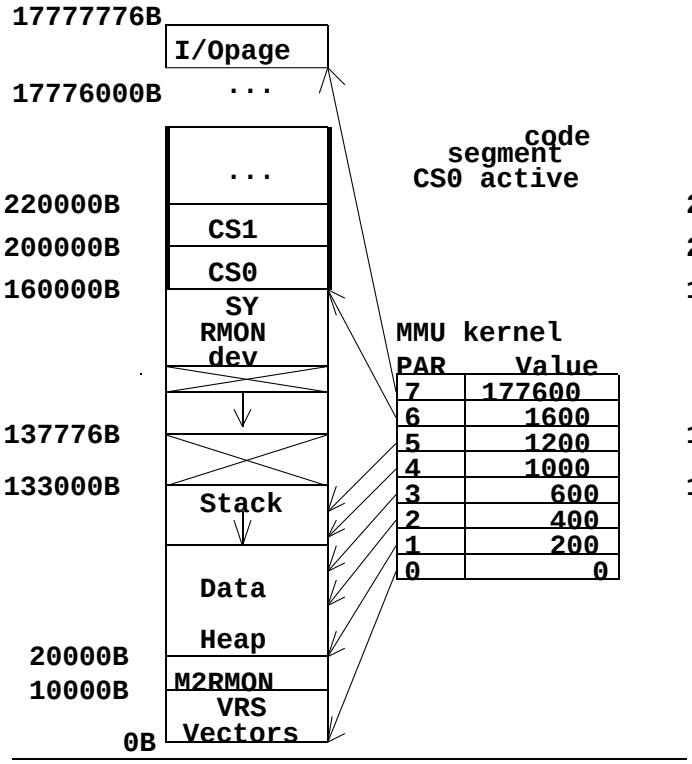
17777776B
I/Opage
17776000B
...
code
segment
CS0 active
...
220000B
CS1
200000B
CS0
160000B
SY
RMON
dev
MMU kernel
PAR
Value
7
177600
6
1600
5
1200
4
1000
3
600
2
400
1
200
0
0
137776B
133000B
Stack
Data
Heap
20000B
M2RMON
10000B
VRS
Vectors
0B

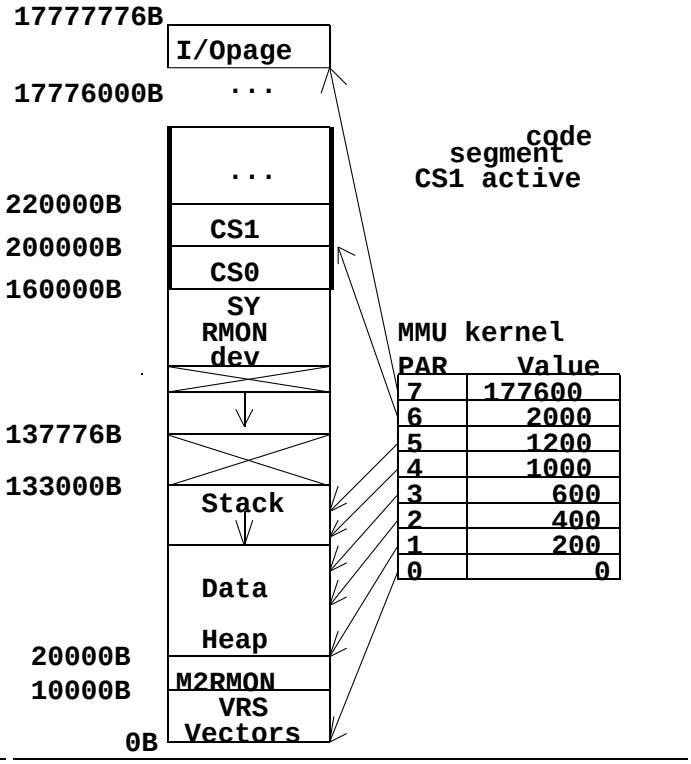
17777776B
I/Opage
17776000B
...
code
segment
CS1 active
...
220000B
CS1
200000B
CS0
160000B
SY
RMON
dev
MMU kernel
PAR
Value
7
177600
6
2000
5
1200
4
1000
3
600
2
400
1
200
0
0
137776B
133000B
Stack
Data
Heap
20000B
M2RMON
10000B
VRS
Vectors
0B

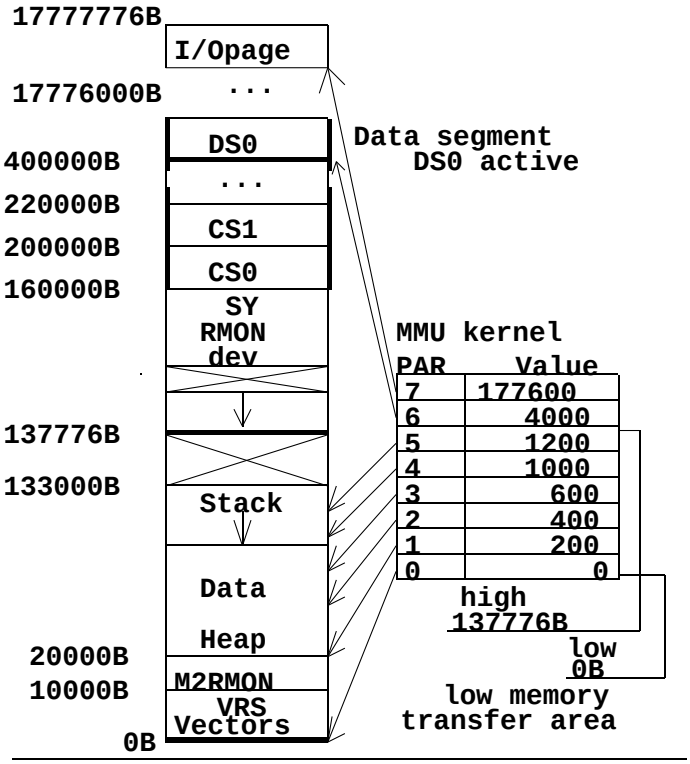
17777776B
I/Opage
17776000B
...
DS0
400000B
...
220000B
CS1
200000B
CS0
160000B
SY
RMON
dev
137776B
133000B
Stack
Data
Heap
20000B
10000B
M2RMON
VRS
Vectors
0B
Data segment
DS0 active
MMU kernel
PAR Value
7 177600
6 4000
5 1200
4 1000
3 600
2 400
1 200
0 0
high
137776B
low
0B
low memory
transfer area

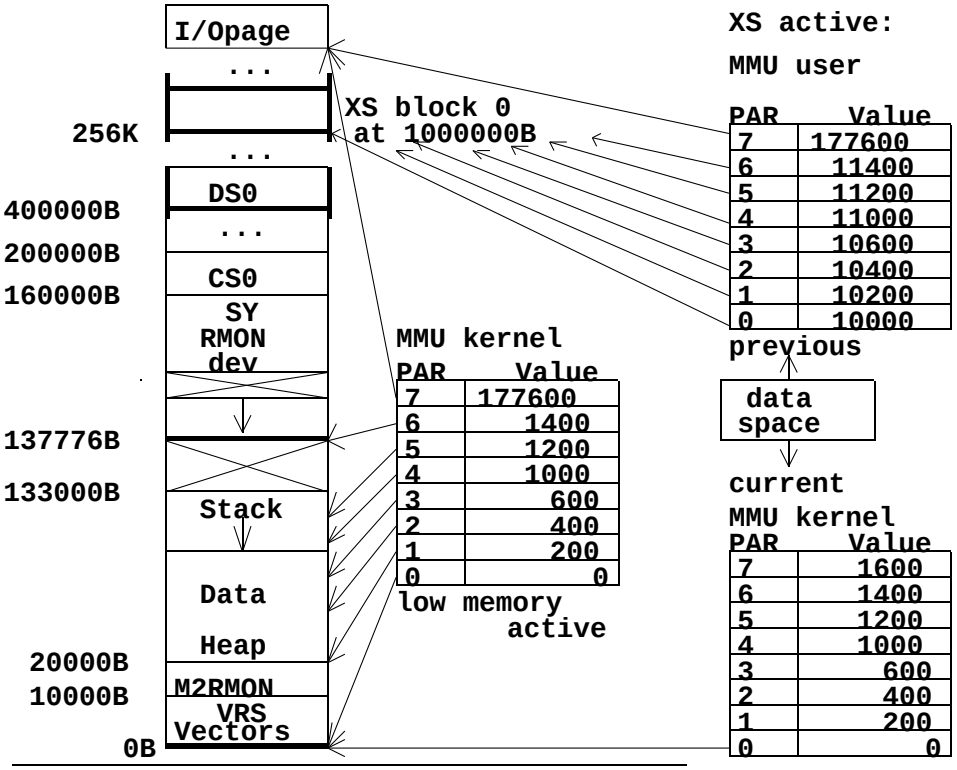
I/Opage
...
256K
XS block 0
at 1000000B
...
DS0
400000B
...
200000B
CS0
160000B
SY
RMON
dev
137776B
133000B
Stack
Data
Heap
20000B
10000B
M2RMON
VRS
Vectors
0B
XS active:
MMU user
PAR Value
7 177600
6 11400
5 11200
4 11000
3 10600
2 10400
1 10200
0 10000
previous
data
space
current
MMU kernel
PAR Value
7 1600
6 1400
5 1200
4 1000
3 600
2 400
1 200
0 0
MMU kernel
PAR Value
7 177600
6 1400
5 1200
4 1000
3 600
2 400
1 200
0 0
low memory
active